HCO-6080R

1080p Analog HD IR Bullet Camera

Key Features

- Full HD resolution
- 0.11 Lux@F1.6 (Color), 0 Lux (B/W : IR LED on)
- 3.2 ~ 10mm (3.1x) motorized V/F lens
- Day & Night (ICR), WDR (120dB)
- SSNRIV, Motion detection
- IR viewable length 30m, IP66, IK10
- Transmission distance max.500m
- Easy Installation (Plug & play), Dual power

Dimensions

Unit : mm (inch)

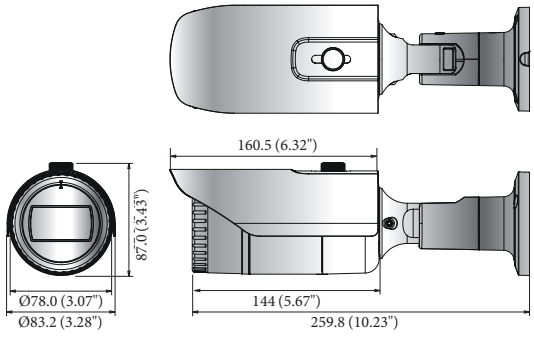

Accessories (Optional)

SBO-100B1

SBP-302PM

	HCO-6080RN	HCO-6080RP
VIDEO		
Imaging Device	1/2.8" 2M CMOS	
Total Pixels	1,945(H) x 1,109(V) 2.16M pixels	
Effective Pixels	1,945(H) x 1,097(V) 2.13M pixels	
Scanning System	Progressive Scan	
Min. Illumination	Color : 0.11 Lux (F1.6, 1/30sec) B/W : 0 Lux (IR LED on)	
S / N Ratio	52dB (AGC Off, Weight On)	
Video Output	BNC (AHD / TVI / CVI / CVBS selectable)	
Resolution	1920 x 1080	
Max. Framerate	30fps@1080p(N)	25fps@1080p(P)
LENS TYPE		
Focal Length (Zoom Ratio)	3.2 ~ 10mm (3.1x) motorized varifocal	
Max. Aperture Ratio	F1.6	
Angular Field of View	H : 110.2°(Wide) ~ 32°(Tele) / V : 55.4°(Wide) ~ 18°(Tele) / D : 128.4°(Wide) ~ 36.6°(Tele)	
Min. Object Distance	0.5m (1.64ft)	
Focus Control	Simple focus (Motorized V/F) / Manual	
Lens Type	DC Auto Iris	
Mount Type	Board-in Type	
OPERATIONAL		
On Screen Display	Multi-language support (16) English, Japanese, Spanish, French, Portuguese, Korean, German, Italian, Russian, Polish, Czech, Romanian, Serbian, Swedish, Danish, Turkish	
Camera Title	Off / On (Displayed 15 Characters)	
Day & Night	Auto (ICR) / Color / B/W	
Backlight Compensation	Off / User BLC / HLC / WDR	
Wide Dynamic Range	120dB	
Digital Noise Reduction	SSNRIV (Off / On)	
Defog	Off / Auto / Manual	
Motion Detection	Off / On (4 zones)	
Privacy Masking	Off / On (8 zones rectangle)	
Gain Control	Off / Low / Middle / High / Very High	
White Balance	ATW / Outdoor / Indoor (4,500K° ~ 8,500K°) / Manual / AWC (1,800K° ~ 10,500K°)	
Electronic Shutter Speed	1sec ~ 1/12,000sec	
Reverse	Off / H-Rev / V-Rev / HV-Rev	
Profile	Basic, Day & Night, Backlight, ITS, Indoor, User	
Alarm	(MD) Output 1	
Remote Control Interface	Coaxial	
Protocol	AHD : ACP (AHD Coax Protocol), CVBS : Pelco-C (Coaxitron), CCP (CVI Coax Protocol), TCP (TVI Coax Protocol)	
IR Distance	30m (98.43ft)	
Video Transmission Distance	500m (5C2V Coaxial Cable)	
ENVIRONMENTAL		
Operating Temperature / Humidity	-30°C ~ +55°C (-22°F ~ +131°F) / Less than 90% RH * Start up should be done at above -10°C (+14°F)	
Ingress Protection	IP66	
Vandal Resistance	IK10	
ELECTRICAL		
Input Voltage / Current	Dual (24V AC ±10% & 12V DC ±10%)	
Power Consumption	Max. 6W	
MECHANICAL		
Color / Material	Dark Gray / Aluminum	
Dimensions (WxH)	Ø78.0 x 259.8mm (Ø3.07" x 10.23") (Without sunshield)	
Weight	948g (2.09 lb)	

* The lastest product information / specification can be found at hanwha-security.com
* Design and specifications are subject to change without notice.

 © 2017 Hanwha Techwin Co., Ltd. All rights reserved.